MARECO PROTOTYPING

Integration of Micro and Macro Prototyping into the production process

INTRODUCTION

Let me introduce myself:

my name is Wim Janssen
I am the Managing Director of
Mareco Kunststoffen B.V.
and
Mareco Prototyping B.V.

both companies are located in Venlo, the Netherlands, on the Rijnaakkade

MARECO PROTOTYPING

Integration of Micro and Macro Prototyping into the production process

CONTENTS

DEFINITIONS OF MICRO AND MACRO PROTOTYPING

MICRO Prototyping:

products that are very small and/or contain very small elements and that are also still functional with those dimensions. For the time being, by *small* I mean dimensions of approximately 0.15 [mm] to 10 [mm].

MACRO Prototyping:

products that are larger than the products that qualify for micro prototyping and that, in principle, can have unlimited dimensions.

COSTS OF CHANGES

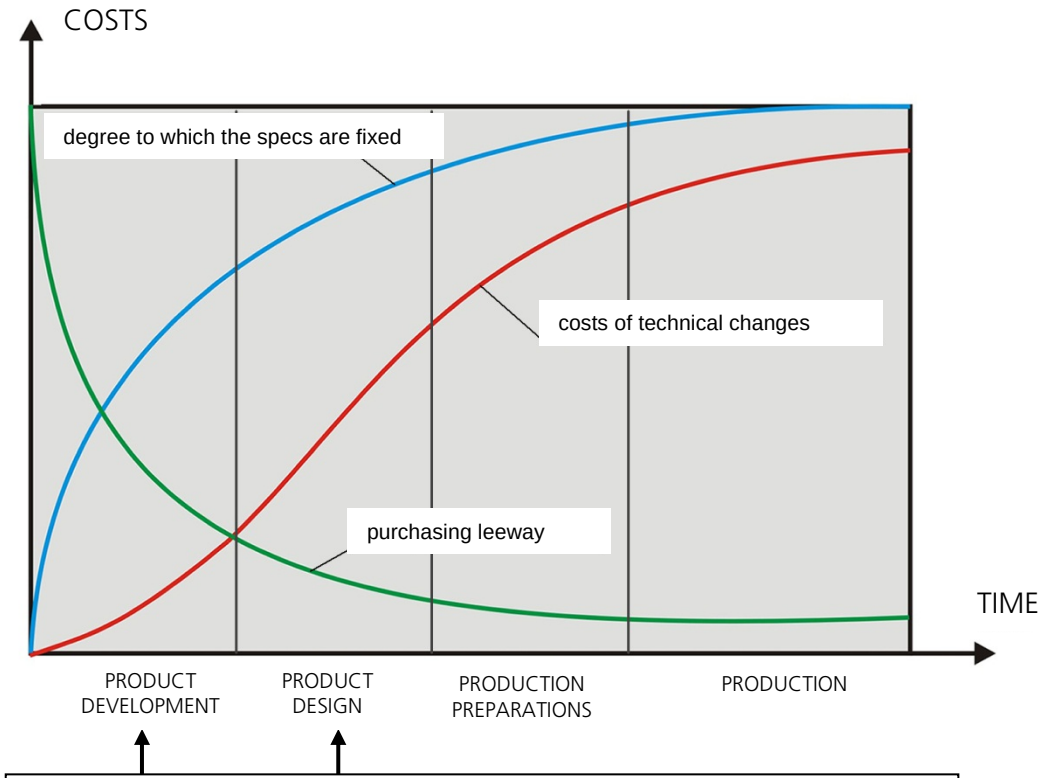

80% of the cost price of the product is determined during the development phase

PROTOTYPING, A NECESSARY STEP

Why integrate prototyping?

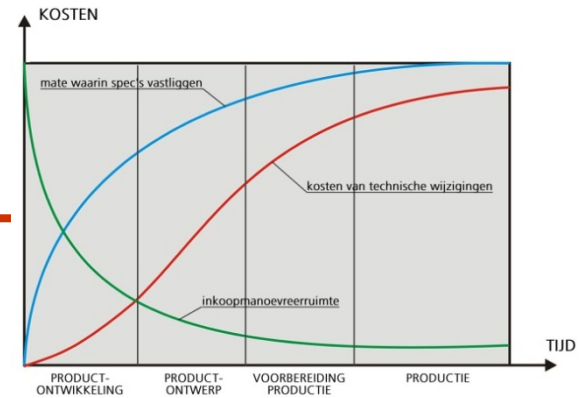

- Minimising design errors
  - cost savings
- Creating a "tangible" product
  - a milestone in the design process
  - for presentations (marketing, customer, trade fairs)
- Shorten the time-to-market

PROTOTYPING, A NECESSARY STEP

Available techniques:

- MICRO PROTYPING
  - photopolymerisation
- MACRO PROTOTYPING
  - SLS (Selective Laser Sintering)
  - Mechanical (CNC milling etc.)
  - PU casting (using silicone moulds)
  - Injection moulding (using an injection moulding tool)

MICRO PROTOTYPING

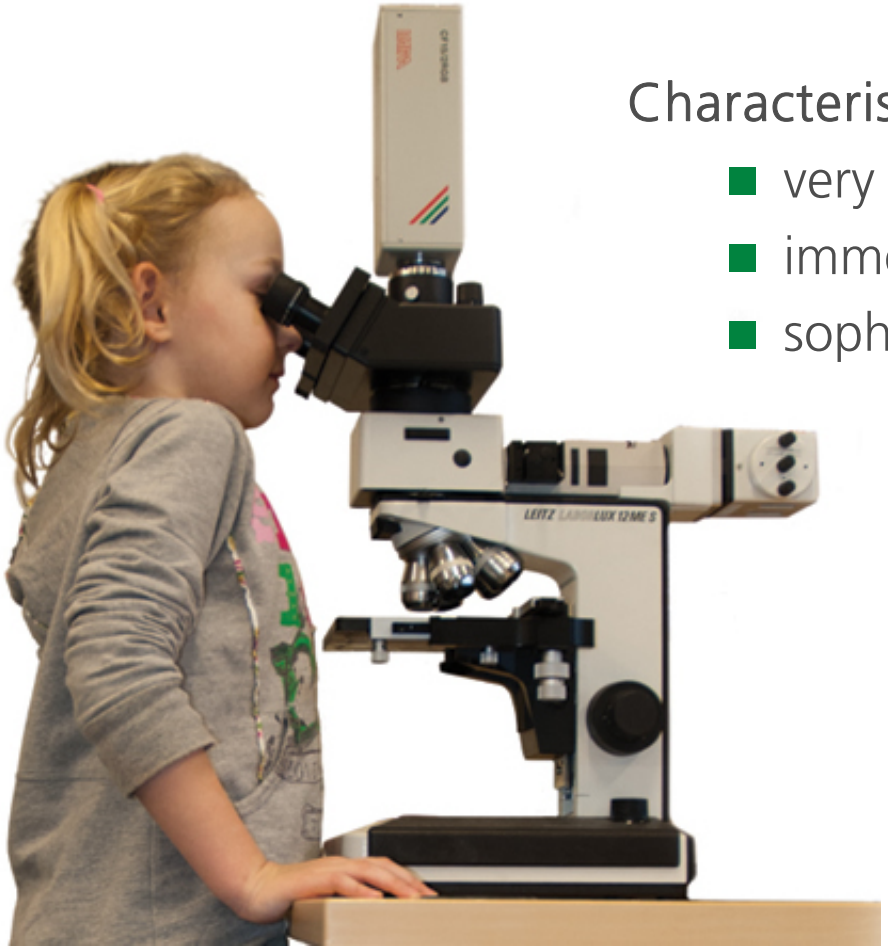

Characteristics of Micro Prototyping:

- very high resolutions (from 16 µm)
- immediately usable functionally
- sophisticated materials

Production process:

- Photopolymerisation

MICRO PROTOTYPING

Very fine details:

- resolutions of 16 µm and better
- layer thicknesses 0.016 to 0.10 mm

MICRO PROTOTYPING

Biocompatible, transparent, nano-cured materials

MICRO PROTOTYPING

Available materials:

- Ceramic Nano Cured RCP 130
- Plastic-like R11
- ABS-like SI1300
- Bio-Compatible E200
- Transparant E300
- Rubber-Like E500

Tables of materials available on:
www.mareco-prototyping.com

Eigenschappen RCP 130			
Properties	Units	Method	Value
Density	[G / cm ³]	DIN ISO 1183-1	
Tensile Strength	[MPa]	DIN EN ISO 527-1	46
Elongation at Break	%	DIN EN ISO 527-1	2.5
Flexural Strength	[MPa]	DIN EN ISO 178	102
Flexural Modulus	[MPa]	DIN EN ISO 178	3860
Izod Impact-Notched	[KJ / m²]	DIN EN ISO 180	0.016
Hardness	Shore D	DIN EN ISO 868	93.1
Heat Deflection Temp. (HDT) op 0,46 Mpa	° C	ASTM D 648	67
Heat Deflection Temp. (HDT) op 1,81 Mpa	° C	ASTM D 648	53.6
Heat Deflection Temp. (HDT) op 0,46 MPa na ovendroging	° C	ASTM D 648	223
Heat Deflection Temp. (HDT) op 1,81 MPa na ovendroging	° C	ASTM D 648	102

MICRO PROTOTYPING

Dimensions achievable using R11 and RCP30 materials

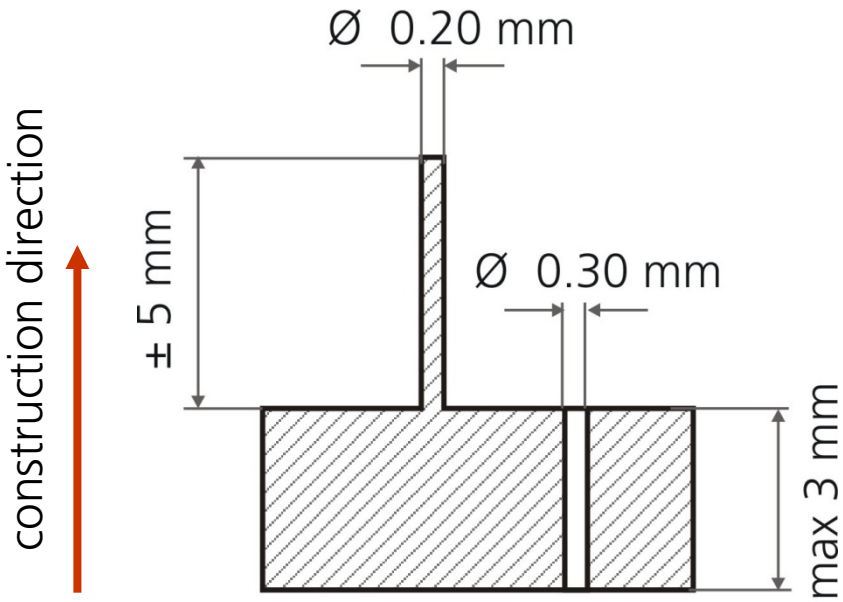

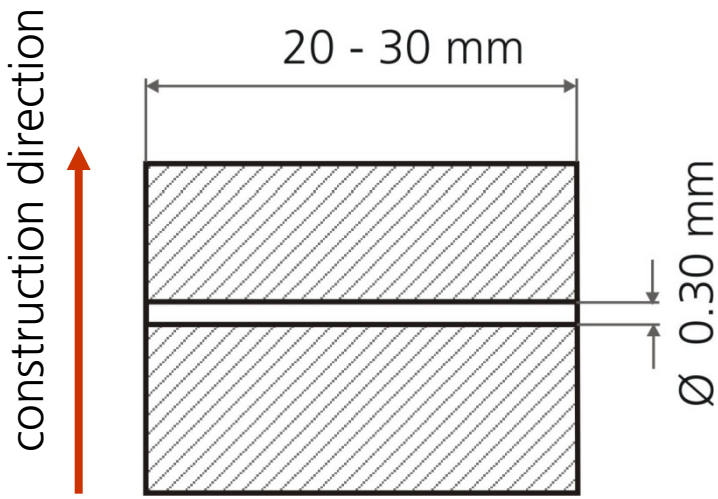

The highest resolution can be achieved by using R11 and RCP30. The maximum product dimensions are then 40 x 30 mm and the theoretical construction height is 230 mm.

MICRO PROTOTYPING : *TECHNOLOGY MATRIX*

tabel 1 ® : Micro-Prototyping met DLP/DMD							
hoe meer plusjes, hoe beter							
belangrijkste gewenste eigenschap	factoren	RCP-130	R-11	SI-300	E-200	E-300	E-500
Snap-Fit onderdelen	functie	+++++	+++	+++++	-	-	+++
	prijs	+++++	+++	+++	-	-	+++
	levertijd	++++	++	+++	-	-	+++
Hoge stijfheid	functie	+++++	+++	++++	+	+++	+
	prijs	+++++	+++	+++	+++	+++	+++
	levertijd	++++	++++	++++	++++	++++	++++
Transparantie	functie	-	++	-	-	+++++	++
	prijs	-	+++	-	-	+++	+++
	levertijd	-	+++	-	-	+++	+++
Bio-compatible	functie	-	-	-	+++++	+++++	+++++
	prijs	-	-	-	+++++	+++++	+++++
	levertijd	-	-	-	+++++	+++++	+++++
Temperatuur- bestendigheid	functie	+++++	+++	++	-	-	-
	prijs	++++	+++++	+++++	-	-	-
	levertijd	++++	+++++	+++++	-	-	-

the full technology matrix is available on our website www.mareco-prototyping.com

MACRO PROTOTYPING

Characteristics of Macro Prototyping:

- unlimited product dimensions
- accurate
- immediately usable functionally
- series productions are also possible (Direct Manufacturing using SLS)

Production process:

- SLS (Selective Laser Sintering)
- mechanical prototyping
- casting in a silicone mould
- injection moulding

MACRO PROTOTYPING

Available materials:

- SLS: Nylon 12
- Mechanical Prototyping: all semi-manufactures
- Casting: several types of polyurethane
- Injection moulding: all available injection moulding polymers

Tables of materials available on:
www.mareco-prototyping.com

Tabel PA12

			SLS	Compare with Injection Moulding
Properties	Units	Norm	PA12	PA11
Density	[g/cm³]	ASTM D792	1.00	1.034
Tensile Strength	[Mpa]	ASTM D638	43	47
Elongation at Break	%	ASTM D638	14	>50
Flexural Modulus	[Mpa]	ASTM D790	1387	1090-1150
Hardness	Shore D	ASTM D2240	73	64-72
Heat Deflection Temp.(HDT) at 0.45 Mpa	°C	ASTM D648	180	140
Heat Deflection Temp.(HDT) at 1.82 Mpa	°C	ASTM D648	95	47
Flamability		UL94	HB	HB

Common Properties

Common Properties	PA12 (SLS)
Glueing	very good
Painting	moderate
Use as Elastic Hinge	very good
Use as Click Finger	very good
Average roughness of a non-finished SLS part	Ra7
Minimum Wall-Thickness	0.65 [mm]
Building Tolerance per 100 [mm]	0.10 [mm]

MACRO PROTOTYPING

SLS Nylon-12: detailed technical components

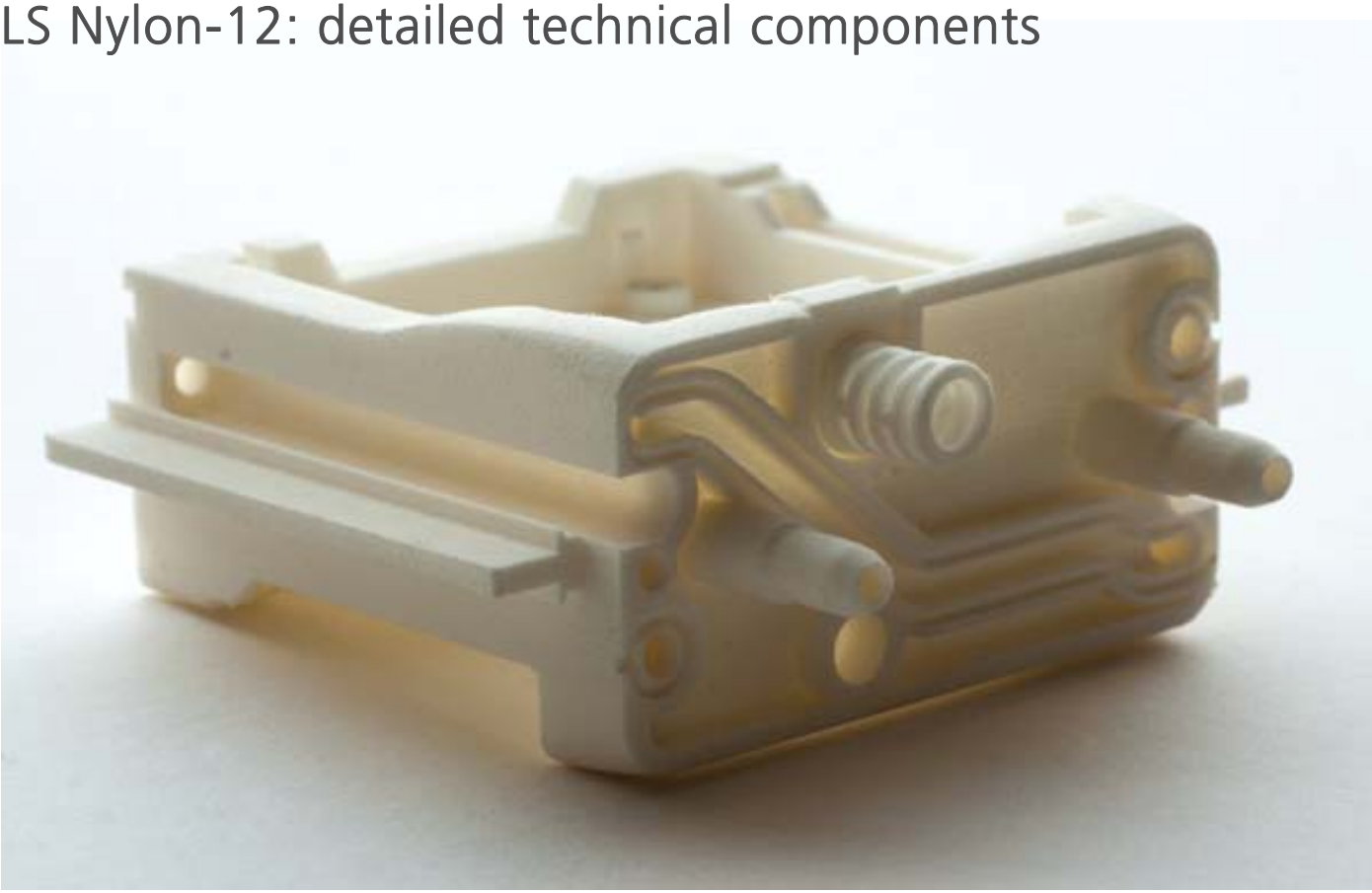

MACRO PROTOTYPING

SLS Nylon-12: functional model with a film hinge

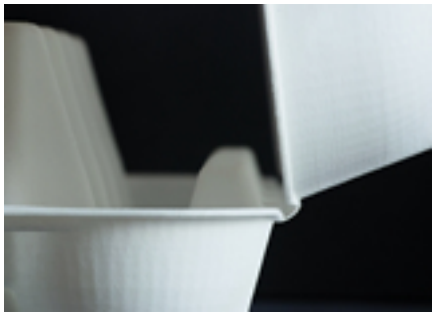

MACRO PROTOTYPING

SLS Nylon-12: painted, functional models

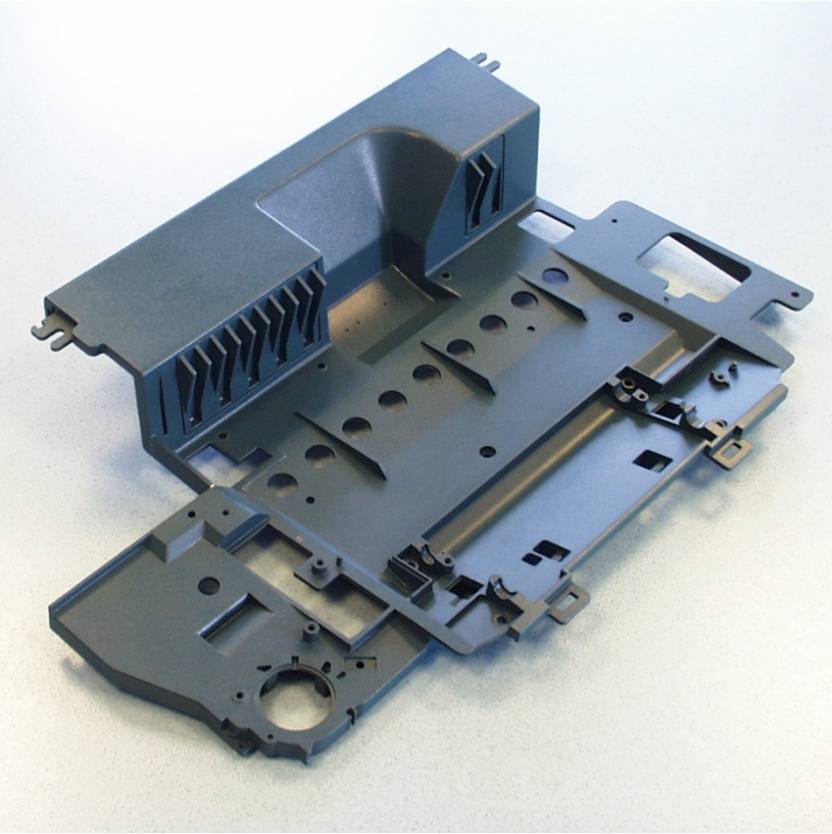

MACRO PROTOTYPING

SLS Nylon-12: also series production (Direct Manufacturing)

MACRO PROTOTYPING

Mechanical Prototyping: all semi-manufactures, including metal

MACRO PROTOTYPING

Casting in polyurethane

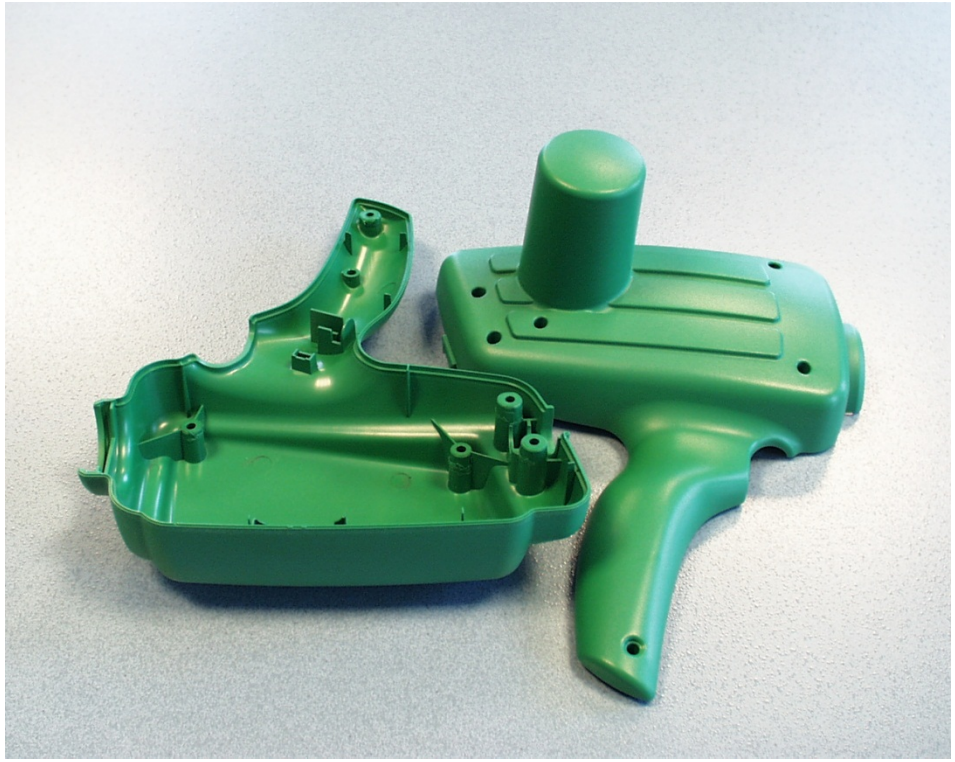

MACRO PROTOTYPING

Injection moulding: example of a product made of PBT-GF30 using an aluminium injection moulding tool

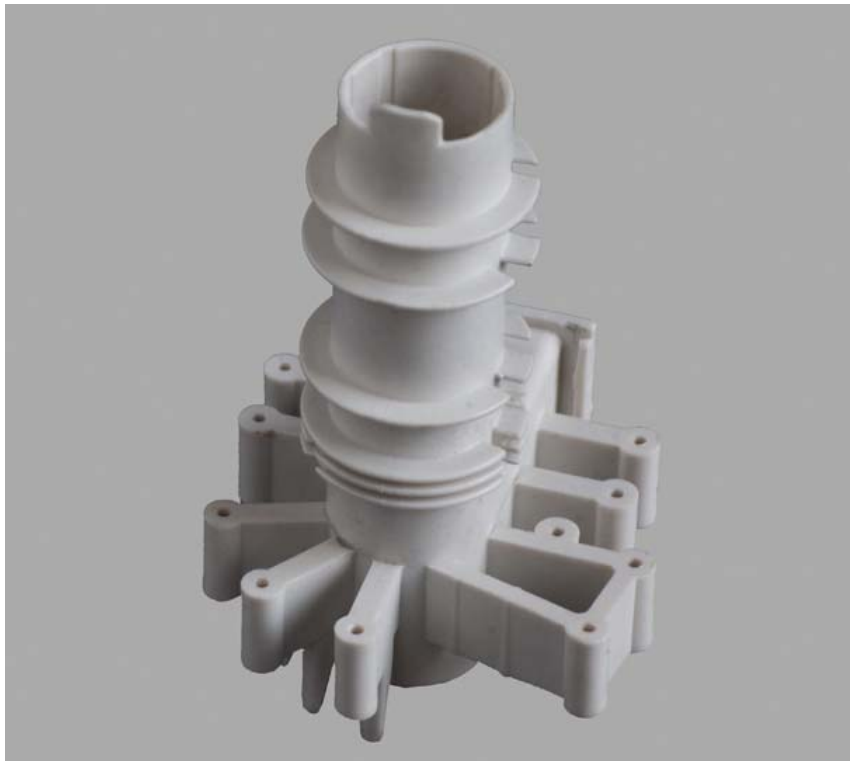

MACRO PROTYPING: *TECHNOLOGY MATRIX*

	factoren	SLS PA12	Mechanisch	Spuitgieten	Afgieten in PU
belangrijkste gewenste eigenschap		Selective Laser Sintering	CNC-frezen draaien verlijmen	Spuitgieten van prototypes	Afgieten in PU a.d.h.v. oermodel
		RP + DM	P	P	RP + DM
		factoren beïnvloed door afmetingen	factoren beïnvloed door CAM en Set-Up	factoren bij prototype spuitgieten sterk beïnvloed door aanmaak hulpmatrijs	factoren sterk beïnvloed door SLA-model + Sil. matrijs
hoe meer plusjes, hoe beter					
Snap-Fit onderdelen	functie	+++++	+++	+++++	+++
	prijs	+++++	+++	+	+++
	levertijd	+++++	+++	+++	+++
Bekledingsdelen Covers	functie	+++++	++++	+++++	++++
	prijs	+++++	++	+	+++
	levertijd	+++++	++	+	++
Zichtmodel en/of gelakte delen	functie	++++	+++++	+++++	++++
	prijs	+++++	+++	+	+++
	levertijd	++++	+++	+	+++
Transparantie	functie	-	++++	+++++	+++
	prijs	-	+	+	+++
	levertijd	-	++	+	+++

the full technology matrix is available on our website www.mareco-prototyping.com

INTEGRATION OF MICRO INTO MACRO

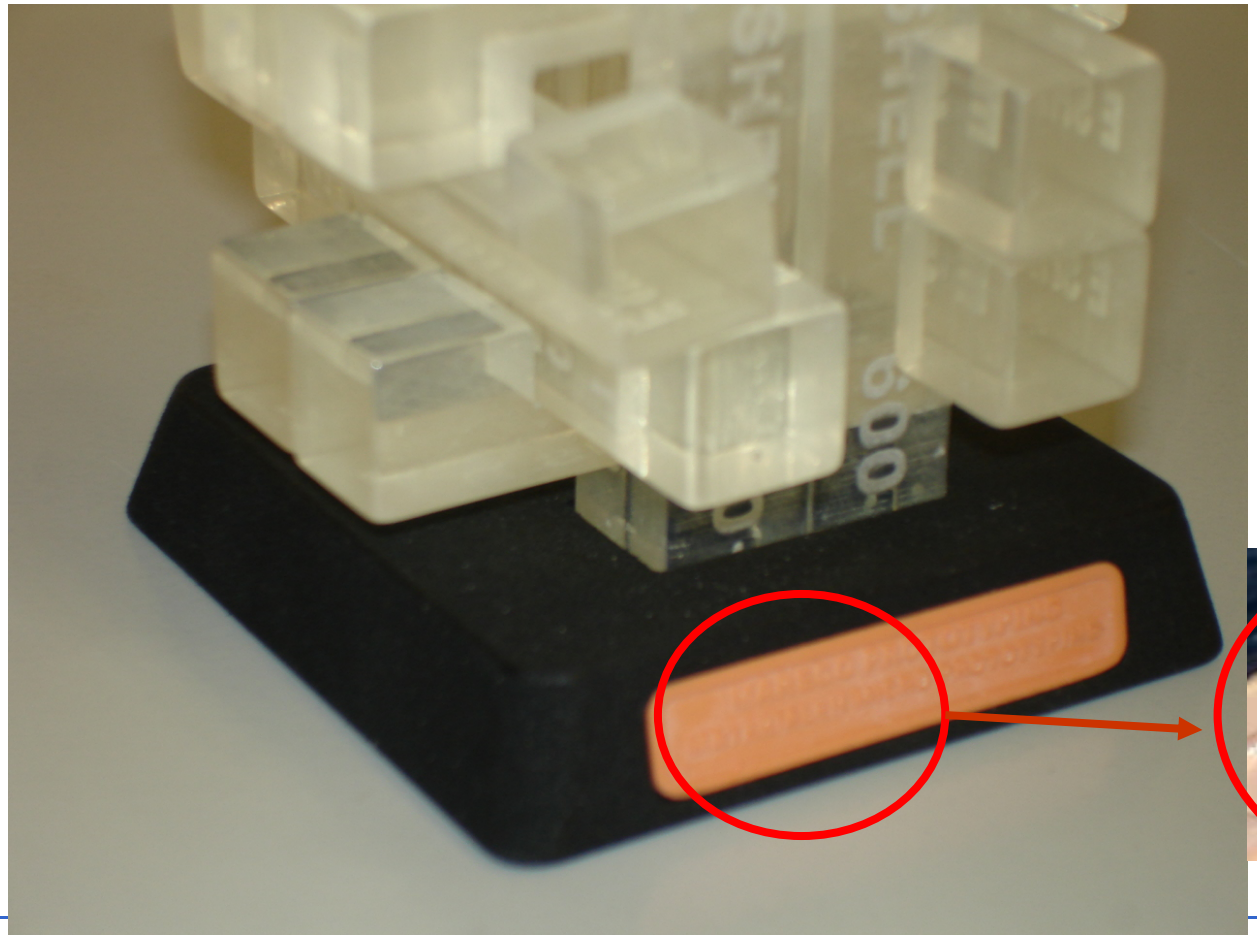

Integrating **MICRO** components into **MACRO** components by means of insertion

SUMMARY

- Prototyping is a necessary step
- Both Micro and Macro Prototyping can be used
- Unlimited dimensions with the highest levels of detailing
- Short leadtimes
- Sophisticated materials
- Series production is also possible by using SLS
- MICRO components can be integrated into MACRO components by means of insertion

CONTACT

Mareco Prototyping B.V.
Rijnaakkade 20
5928 PT Venlo, the Netherlands

P.O. Box 3196
5902 RD Venlo, the Netherlands

You can download this presentation from our website
www.mareco-prototyping.com

Sales:
+31 (0)77 – 323 01 20 (direct)
+31 (0)6 – 504 599 25 (direct)
+31 (0)77 – 351 50 50 (switchboard)
+31 (0)77 – 351 38 38 (fax)